Color Video Conference Camera

USER MANUAL



Video conference camera overview

Preface

Thank you very much for using our color video conference camera. Please read this manual in detail and use accordingly.

This manual introduce the function of video camera, opening and operation principle in detail.

This color video camera is high-quality and flexibility with a remote pan 340° /tilt 120° operation and image flip, and a DSP dealing integration module input. Support VISCA and PELCO P/D protocol.

Allowing install on the ceiling /desk and an accurate remote control of RS232/422/485.

Safety requirement

In order to avoid camera and other connecting equipment damaged and lead to potential danger, please follow the rules as below:

- Only professional technician can install and maintenance;
- Prohibit setting on the places which raining or dampness, using unit under stated temperature, humidity and power;
- Using accessories from original factory or allowed;
- Once exchange product or repair happen please use universal meter test before using;
- Please use soft and dry rag for cleaning, not strongly corrosive cleanser for avoiding mangled for outside of camera or lens;
- Take care using and no squeeze crust avoiding camera broken;
- Bracket must be endures 3 times weight of camera at least.

Features

- 4K Ultra HD PTZ camera;
- Pan 340°, Tilt 120°;
- The features include advanced ISP processing algorithms to provide vivid images with a strong sense of depth, high resolution, and fantastic color rendition;
- Multi function IR remote controller can control PTZ, lens and other function conveniently;
- Using PC to control camera with Sony Visca or Pelco command;
- IR remote controller, RS422, RS232 and other control method;
- 9 preset positions by remote controller, 200 preset positions by PC or remote control unit, memory auto saved when power off;
- The maximum speed of horizontal rotation: 90° /s, tilt: 90° /s;
- Providing multifunctional accurate remote control.

Packing list

Please check up all devices inside while open package.

Video camera----------1
Remote controller----------1
USB cable----------1
HDMI cable----------1
Power adapter----------1
RS232 cable----------1
Bracket----------1
User manual----------1

Remote controller (1)



Video camera (1)



USB cable (1)



HDMI cable (1)



Power adapter (1)



Rs232 cable (1)



Bracket (1)

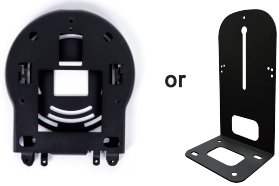

or (Optional)

User manual (1)



Parts and Introduction

Front

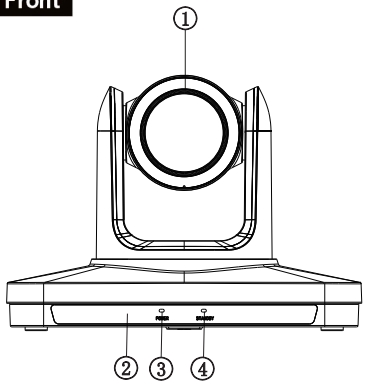

1.Lens
2.Sensor for the remote control
3.Power lamp
4.Standby lamp

5.RS-422/485 VISCA/PELCO
6.RS-232 IN/OUT
7.Line-in
8.USB extended interface (available for omnidirectional microphone or other USB peripherals)
9.3G-SDI HD video output
10.HDMI video output
11.USB3.0 video output
12.RJ-45 network video output
13.DC IN 12V input

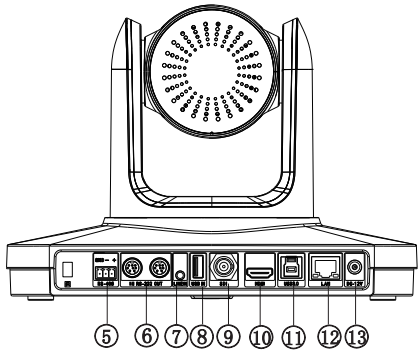

Bottom

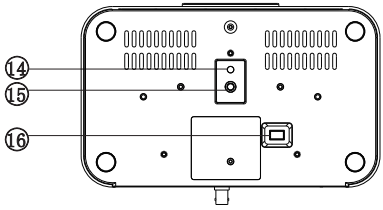

14.Local hole
15.British screw holes
16.Dial switch

Remote Controller

❶ IR transmit
❷ POWER
❸ PAN-TILT RESET
❹ CAMERA SELECT
❺ POSITION: (Number area; PRESET: press PRESET then press 1-9 for set up preset position)
❻ RESET: (Press RESET and then press1-9 for eliminate preset position)
❼ MENU
❽ S-OUT: Press and hold for 3 seconds to switch to 720P50 resolution
❾ PAN-TILT ; HOME for return middle position
❿ CLOSE THE MENU
⓫ INFO: Screen information display
⓬ Reserved buttons have no function
⓭ Long press for 3 seconds to switch the intelligent control on/off, short press to switch the auto framing on/off
⓮ Short press to switch the AI tracking on/off
⓯ FOCUS: (auto or manual)
⓰ ZOOM: (Telephoto or Wide Angle)
⓱ F1:Press and hold for 3 seconds to quickly switch the image normal and inversion
⓲ F2:Press and hold for 3 seconds to quickly restore the factory settings
⓳ F3: Long press 3S to quickly switch between left and right image mirroring
⓴ Brightness adjustment: bright-/ bright+
㉑ BACK LIGHT

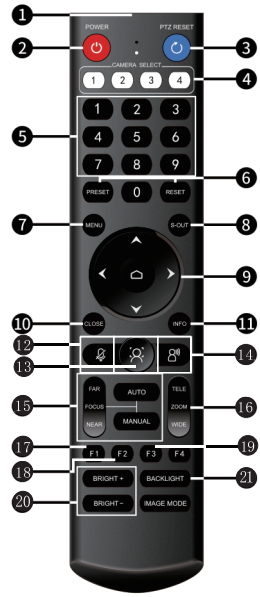

∗The short press operation of button ⓭, button ⓮ is only effective when the intelligent control is turned on

∗Infrared address modifying operation (combination buttons):
Press the button ❿ over 5 seconds, then press F1/F2/F3/F4 to switch infrared address 1/2/3/4 respectively.
After the factory settings are restored through the menu or long press F2, the infrared address does not reset.

VISCA RS-485

Pin No.	Function
1	GND
2	RXD IN- (RS485-)
3	RXD IN+ (RS485+)

GND - +
1 2 3



Attention:

RS-485 and RS-232 can not be used at the same time.

Connection Instruction

Please check if all the connection is correct before starting the camera.

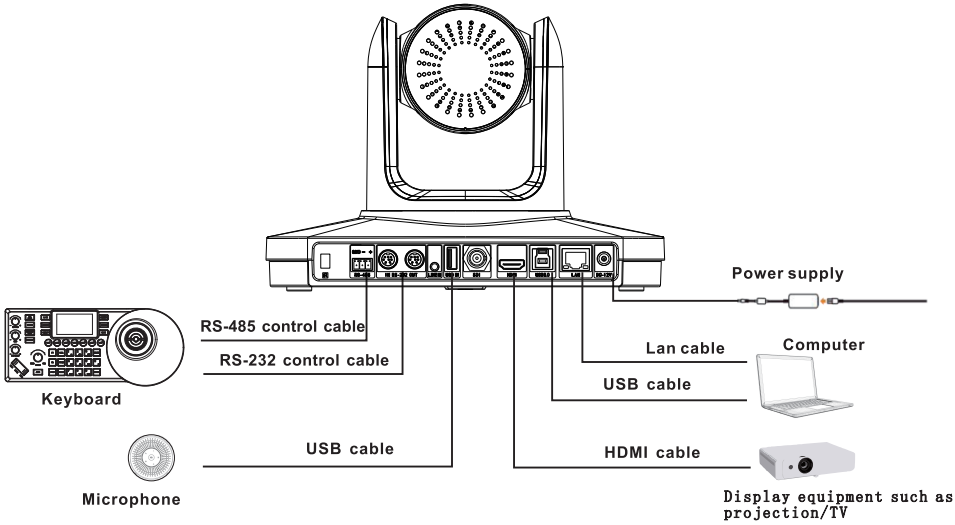

Attention： **If position 1 was set, camera will automatically call the PTZ setting of position 1 after powering on. If position 1 wasn't set, camera will go to "HOME" position(Lens faces straight ahead horizontally and vertically, zoom to minimum)**

VISCA RS-232

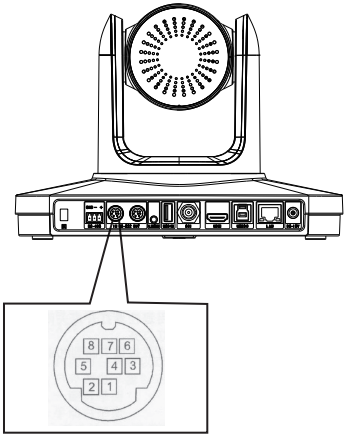

NO	Pins	Signal
1	NC	No Connection
2	NC	No Connection
3	TXD	Transmit Data(OUTPUT)
4	GND	Ground
5	RXD	Receive Data(INPUT)
6	GND	Ground
7	NC	No Connection
8	NC	No Connection

The Menu

Due to product iteration, the product menu is subject to change without prior notice, subject to the actual object .

Serial Port

This option can set protocol, address, baud rate, speed scale, speed limit when the camera is communicating through serial port.

PTZ

This option can set PTZ related functions, including focus mode, AF sensitivity, preset freeze, remote speed, pan direction, tilt direction, filp and mirror.

AI

This option allows you to set functions related to smart applications, including digital zoom, auto framing, AI tracking, etc. This menu option is only available to models that support AI functions.

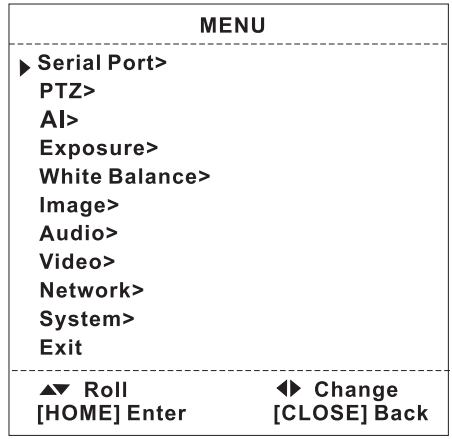

Exposure

This option can set exposure mode including full auto exposure, manual exposure, shutter priority, iris priority, bright priority, etc.

White Balance

This option can set white balance mode including auto, manual, indoor, outdoor, one push, ATW,color temp, etc.

Image

This option allows you to set image effects, including 2D/3D noise reduction, contrast. bright, color gain,sharpness, hue,gamma, flip, mirror, etc.

Audio

When this feature is activated, it can output audio signals inputted through LINE-IN.

Video

This option can set the megapixel of camera as well as image mode.

Network

This option can view the network information of the current camera and set the DHCP function on/off.

System

This option can set language of camera and IR remote control address bits, review present version and reset default factory settings.

Exit

Exit menu.

The Menu

1.Serial Port Settings

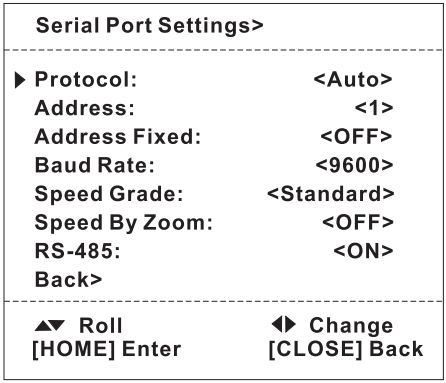

Serial Port Settings Sub Menu

Protocol: Can set auto/visca/pe1co-p/pelco-d.

Address: Can set camera serial communication address.

Address Fixed: This option is used to cover automatic distributing order under VISCA protocol.

Baud Rate: Can set serial communication baud rate, 2400/4800/9600/ 19200/ 38400/115200.

Speed Grade: Can set speed range of PTZ(only take effect when using serial communication), standard/ expand.

Speed By Zoom: Can set on/off of pan tilt speed and lens magnif ication linkage. (only take effect when using serial communication)

RS-485: This option can set the camera to enable/disable the RS-485 serial port return code function.

2.PTZ Settings

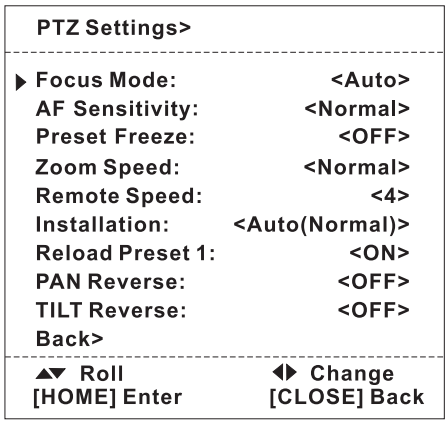

PTZ Settings Sub Menu

Focus Mode: auto/ manual.

AF Sensitivity: This option is for setting the AF sensitivity of camera, there are 3 levels: low, standard and high levels.

Preset freeze: when it's turned on, the picture will remain frozen during the process of calling preset position, and the real-time image will be recovered after reaching the preset position.

Zoom Speed: This option is for setting the zoom speed of camera, there are 3 levels: low, standard and high levels.

Remote speed: PTZ speed 1-16(only take effect when using IR remote controller).

Installation: This option can set image flip effect of camera in order to match intallation of desktop and ceiling.

Reload Preset: This option can set the function that automaticly call number 1 preset position after starting camera.

Pan Reverse: Can set pan direction normal/ reverse.

Tilt Reverse: Can set pan direction normal/ reverse.

The Menu

3.AI Settings

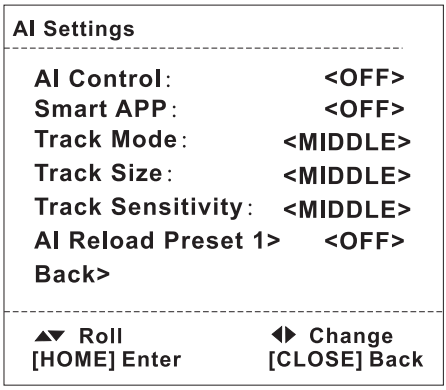

AI Settings:

AI Control: This option can be set to turn on or off smart applications. Only after this option is turned on can the corresponding smart mode be selected.

Smart APP: This option can set the specific application mode, and you can choose digital zoom/auto framing/AI tracking

Track Mode: This option can set the area on the screen where the target person will be positioned when AI tracking. You can choose left/middle/right.

Track Size: This option can set the proportion of the optical zoom frame that is enlarged when AI tracking is turned on. You can choose small/medium/large

Track Sensitivity: This option can set the tracking sensitivity, you can choose low/medium/high

AI Reload Preset 1: This option can set whether to call preset No. 1 first when AI is turned on.

4.Exposure Settings

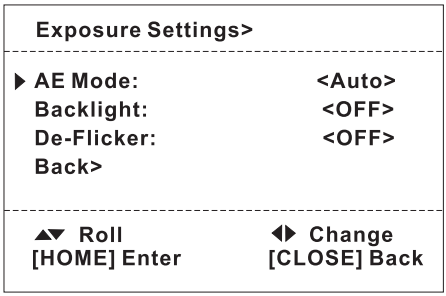

Exposure Submenu

Auto Exposure: In Auto Exposure mode, the backlight compensation can be adjusted on/off; De-flicker: The camera's refreshed rate can be adjusted in this option, solving the problem of screen flicker caused by light.

Iris priority : Aperture level can be adjusted

Shutter priority: Shutter value can be adjusted

Manual exposure: Gain can be adjusted

5.White Balance Settings

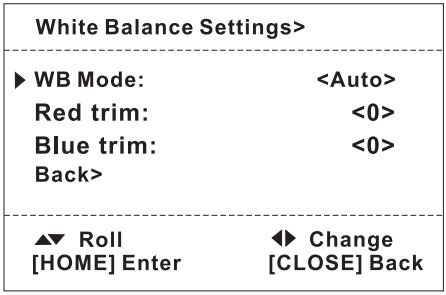

White Balance Settings Sub Menu

WB Mode: auto, manual,indoor, outdoor, one push, ATW, color temp.

The Menu

6.Image Settings

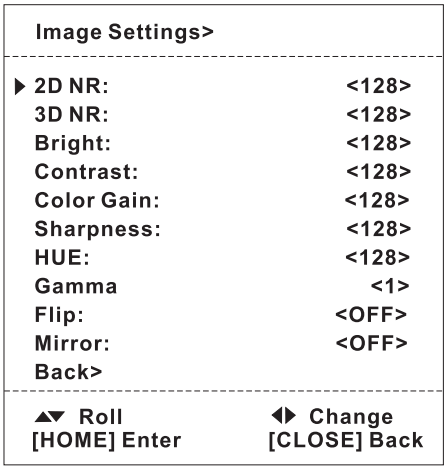

Image Settings Sub menu

2D NR: 2D noise reduction, 0-255.

3D NR: 3D noise reduction, 0-156.

Bright: Can set image bright, 0-255.

Contrast: Can set image contrast, 0-255.

Color Gain: Can set image color gain, 0-255.

Sharpness: Can set image sharpness value, 0-255.

HUE: Can set image color saturation, 0-255.

Gamma: Can set image gamma, 1-15.

Flip: Can set the camera image to flip up and down 180 degrees.

Mirror:Can set the camera image to flip left and right 180 degrees.

7.Audio Settings

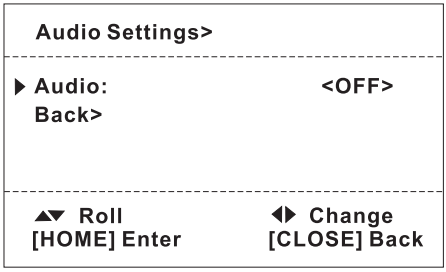

Audio Settings Sub menu

Audio: This option can set the HDMI/SDI audio turn on/off.

8.Video Settings(4K model)

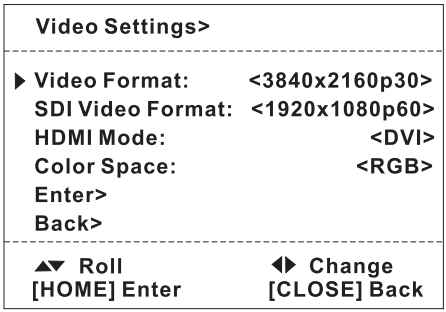

Video Settings Sub menu

Video Format: This option can set the current resolution of the HDMI.

SDI Video Format: This option can set the current resolution of the SDI.

HDMI Mode: This option can set the HDMI/DVI mode.

Color Space: This option can set RGB/YCbCr.

The Menu

Video Settings(1080p model)

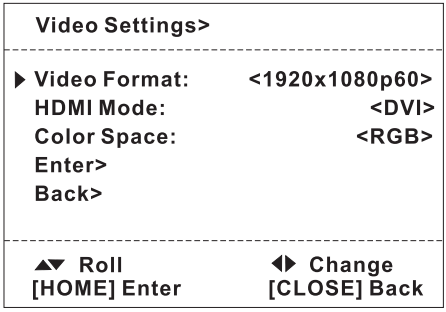

Video Settings Sub menu

Video Format: This option can set the current resolution.

HDMI Mode: This option can set the HDMI/DVI mode.

Color Space: This option can set RGB/YCbCr.

9.Network Settings

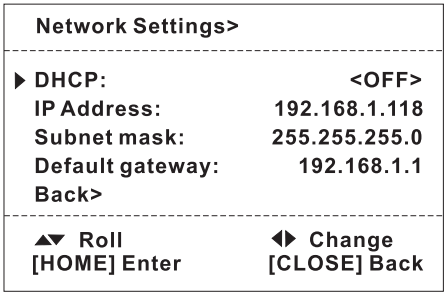

Network Settings Submenu

Can check network information of camera.

Can set DHCP ON/OFF

10.System Settings

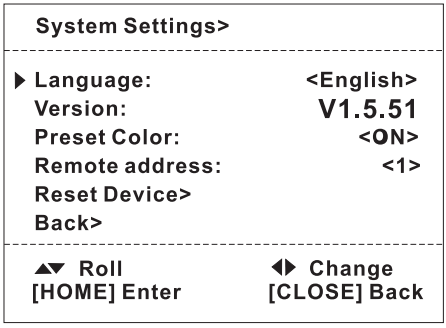

System Settings Sub menu

Language: Camera menu operation language can be set, simplified Chinese/English.

Version: You can view the current software version, which can not be modified.

Preset Color: This option can be used to set the camera to enable/disable the function of saving the image effect in the preset position.

Remote address: Can be set to receive the remote control address channel of the infrared remote control.

Reset Device: You can restore to the default factory settings for all the camera parameters.

Intelligent Application Description

Intelligent applications are currently divided into two types: automatic framing and AI tracking. Automatic framing will automatically adjust the camera according to the number of participants and changes in location, so that all participants are included in the panoramic field of view and the best picture is automatically presented.

AI tracking will accurately identify a single human target in the scene, and can always follow and shoot stably when the target moves, ensuring that the target character is always in the center of the screen.

To use smart applications, you first need to turn on the smart control switch and then select the desired application.

***The smart application currently supports 1080P , and will automatically switch to 1080P after being turned on.**

AI Tracking

This function can use the "menu call key" on the remote control to switch to AI tracking in the AI intelligent application. After exiting the menu.the camera PTZ can implement the humanoid tracking function.The camera automatically captures the person information in the picture and adiusts the PTZ angle follow the target in real time.The target is in the center of the screen.

Note: When the tracking function is turned on, it will affect the manual PTZ control function. If you need to switch to manual control, just call the menu and turn off the "AI tracking" function.

Auto Framing

This function can use the "menu call key" on the remote control to open the screen OSD menu, and select to switch to "auto framing" in "AI" -"Smart Application" ,after exiting the menu, the camera will automatically detect the number and position ofthe people in the picture, and ensure that they are always in the center ofthe composition.

Network Connections

Connection mode

Direct connection mode: connect the camera directly to the computer with a network cable.

Network connection mode: connect the camera to the Internet network, and access the network through a router or switch. Users can 1og in to the device through the browser.

The computer must have the network segment where the camera IP is located. If the network segment is not added, you will not be able to log in. If the default IP address of the camera is 192.168.1.118, you need to add 1 network segment to the computer. The specific method is as follows :

Firstly open the computer network local connection properties window, select “Internet Protocol Version 4 (TCP/Ipv4)” double click or click the property “Internet Protocol Version 4 (TCP/IPv4)” enter the properties window, click “Advanced” to enter advanced TCP/IP Set the IP address and subnet mask in the IP address field. After the addition is completed, click 0K to complete the IP network segment addition. Users can add corresponding network segments according to the modified camera IP address.

Network login

WEB login:

Enter the device IP address in the browser address bar to default to 192.168.1.118, and press Enter to enter the web client login interface. Enter “admin” in the [Username] field, “admin” in the [Password] field, and pass the verification to enter the background preview interface.

Language selection: The selected language can be displayed at the bottom of the login interface.

Preview and pan/tilt

After successful login, enter the management interface, and the default is the video preview interface. On the left side of the preview interface is the image preview area, and on the right side of the preview interface is the pan/tilt control area, which can realize the following functions: tilt to up, tilt to down, pan to left, pan to right, the pan/tilt returns to the initial center position, the lens zooms out, the lens zooms in, the near focus and the far focus are adjusted, the pan/tilt speed level is adjusted, the zoom speed level is adjusted, and the focus mode is adjusted; set the preset number , Number 1 starts counting, which is the No. 1 preset position; save the currently set preset position; delete the corresponding preset position; call the corresponding preset position

Configuration

Click “Configuration” at the top of the interface to enter the software parameter configuration interface, which mainly includes the following options: system, network, audio and video, image, and user management.

Configuration

System

1) System settings: display the basic information of the device (not adjustable), time configuration is used to configure the system time;
2) System maintenance: can be used for software upgrade, restore factory settings and restart the device.

Internet

1) Basic Configuration.
TCP/IP configuration.
DHCP: Set whether to enable automatic IP acquisition.
IP address: set the IP address, the default is 192.168.1.118, where the IP is the address of the login web page.
Subnet Mask: Set the subnet mask (default is 255.255.255.0).
Default Gateway: Set the default gateway (192.168.1.1 by default).
Preferred DNS Server: Set the DNS server (default is 192.168.1.1).

DNS state selection.

Port Configuration.

HTTP port: Set the HTTP port, the default is 80.
RTSP port: Video Acquisition port, the default is 554.
ONVIF port: Set the ONVIF port, the default is 2000.
Service Port: Set the service port, the default is 90.
VISCA IP Port: Show the VISCA IP port, the default is 52381.
VISCA TCP Port: Show the VISCA TCP port, the default is 52300.

2)Advanced configuration.
Configurable SRT, RTMP, RTSP and other related parameters.

Video&Audio

1)Video
Set the video compression format, the default main/sub stream compression format is H.264/H.265;
Stream: Set different video output modes and select different streams.Including main stream and sub stream,the 4K model main stream can be 3840*2160,1920*1080: the 1080P model main stream can be 1920*1080,1280*960,1280*720,720*576,720*480,640*480;
the 4K mode sub stream can be 640*480,640*360,480*360,352*288,320*240,176*144:
Video frame rate: set the video frame rate;
I frame interval:set keyframe interval;
Bit rate type: default variable bit rate;
Image quality: Under the condition of variable bit rate, the image quality can be selected;
Bit rate upperlimit: 128~20000 optional.

2)Audio
Configure Network Audio.

Configuration

Image

Image parameters The image parameters interface can make the following adjustments to the image effect.

Image adjustment: it can set picture brightness, contrast, saturation, sharpness, chroma, 3D noise reduction and other functions.

Exposure: Exposure mode, shutter speed, gain, aperture, etc. can be set.

Image enhancement: left and right mirroring, up and down mirroring, backlight compensation.

White balance: White balance mode, red and blue gain effect image can be set.

User Administer

Used to modify username and password.

Technical parameter

Due to the continuous iteration of the product, if there is any parameter change, it is subject to the actual product.

Image Sensor	SONY 1/2.8" CMOS
Effective Pixels	2.07 Megapixels
Resolution	HDMI/3G-SDI:1080p60/50/59.94,1080p30/25/29.97,720p60/50 USB:1920*1080,1280*720,960*540,800*600,720*576,720*480, 640*480,640*360,352*288,320*240
Signal	PAL/NTSC
Lens	12X/20X optical zoom
Focal Length	12X:f=4.1mm(W)~49.2mm(T) 20X:f=5.2mm(W)~104mm(T)
Horizontal View Angle	12X:72.5°(W)~6.57°(T) 20X:58.7°(W)~3.2°(T)
Focus System	Auto/Manual
Minimum Illumination	0.1Lux
Exposure Control	Auto/Manual/Shutter priority/Iris priority/Bright priority
Shutter	1/50～1/10000s
Gain	Auto/Manual
White Balance	Auto/Manual/indoor/Outdoor/onepush/ATW
Image Effect	Full color/image flip
S/N Ratio	⩾50db
Pan	340°(max.speed:90°/s)
Tilt	-30°to +90°(max.speed:90°/s)
Video Output HD	HDMI、3G-SDI、RJ45、USB3.0
Extended Interface	Type-A USB2.0
Power	12V DC(10.8～13.0V DC)
Protocol	SONY VISCA、PELCO P/D、VISCA over IP、ONVIF
Control Mode	RS-232 、RS-485/422、USB Control
Size	(W)240*(D)162*(H)173mm
Weight	1200g
Color	Black
Accessories	Power adapter, IR Remote, User manual, HDMI cable，USB cable, RS232 cable, Bracket

Technical parameter

Due to the continuous iteration of the product, if there is any parameter change, it is subject to the actual product.

Image Sensor	SONY 1/2.8" CMOS
Effective Pixels	8.29Megapixels
Resolution	HDMI: 4K30/25, 1080p60/59.94/50/30/29.97/25, 720p60/50 3G-SDI: 1080p60/59.94/50/30/29.97/25, 1080i60/59.94/50,720p60/50 USB: 3840*2160, 2560*1440, 1920*1080, 1280*720, 960*540, 800*600, 720*576, 720*480, 640*480, 640*360, 352*288, 320*240
Signal	PAL/NTSC
Lens	12X/20X optical zoom
Focal Length	12X:f=4.1mm(W)~49.2mm(T) 20X:f=5.2mm(W)~104mm(T)
Horizontal View Angle	12X:72.5°(W)~6.57°(T) 20X:58.7°(W)~3.2°(T)
Focus System	Auto/Manual
Minimum Illumination	0.1Lux
Exposure Control	Auto/Manual/Shutter priority/Iris priority/Bright priority
Shutter	1/25～1/10000s
Gain	Auto/Manual
White Balance	Auto/Manual/indoor/Outdoor/onepush/ATW
Image Effect	Full color/image flip
S/N Ratio	⩾50db
Pan	340°(max.speed:90°/s)
Tilt	-30°to +90°(max.speed:90°/s)
Video Output HD	HDMI、3G-SDI、RJ45、USB3.0
Extended Interface	Type-A USB2.0
Power	12V DC(10.8～13.0V DC)
Protocol	SONY VISCA、PELCO P/D、VISCA over IP、ONVIF
Control Mode	RS-232 、RS-485/422、USB Control
Size	(W)240*(D)162*(H)173mm
Weight	1200g
Color	Black
Accessories	Power adapter, IR Remote, User manual, HDMI cable，USB cable, RS232 cable, Bracket